FRONT PANEL Nomad 100

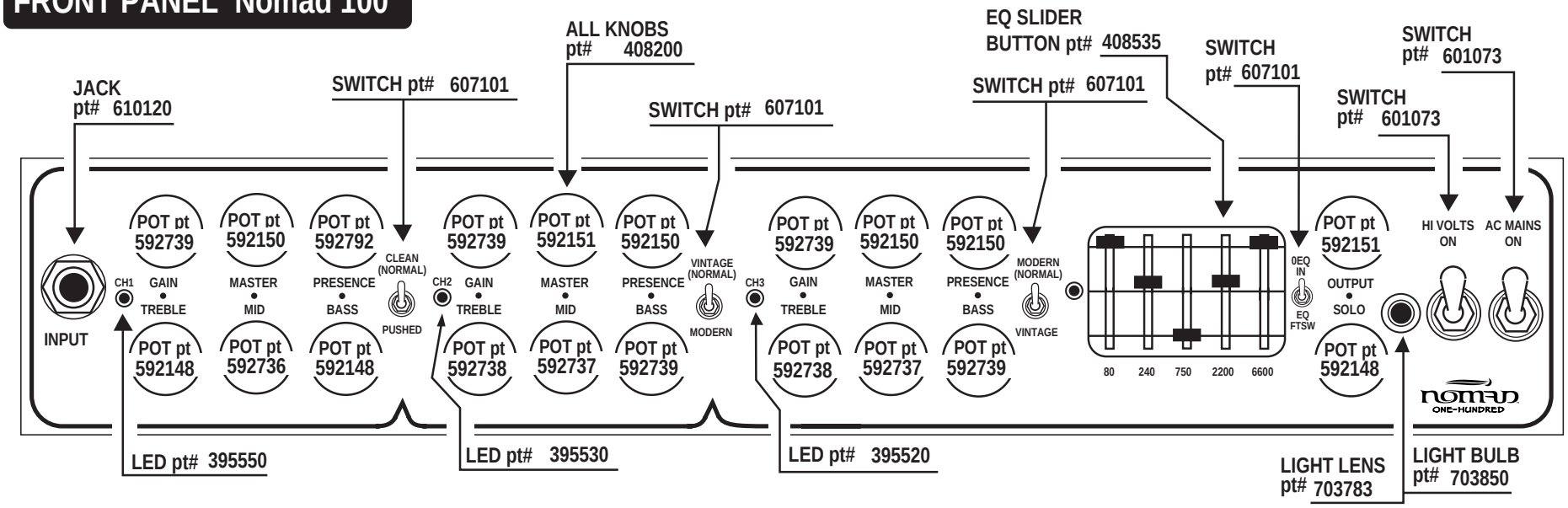
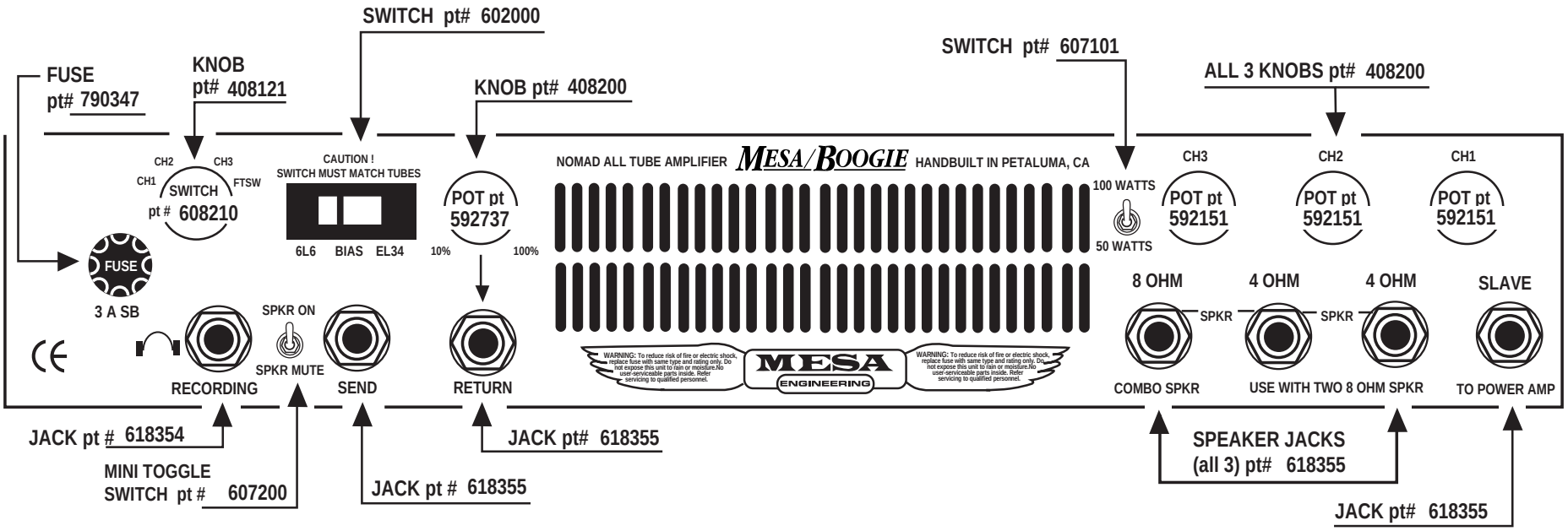
REAR PANEL Nomad 100