FRONT PANEL Nomad 45

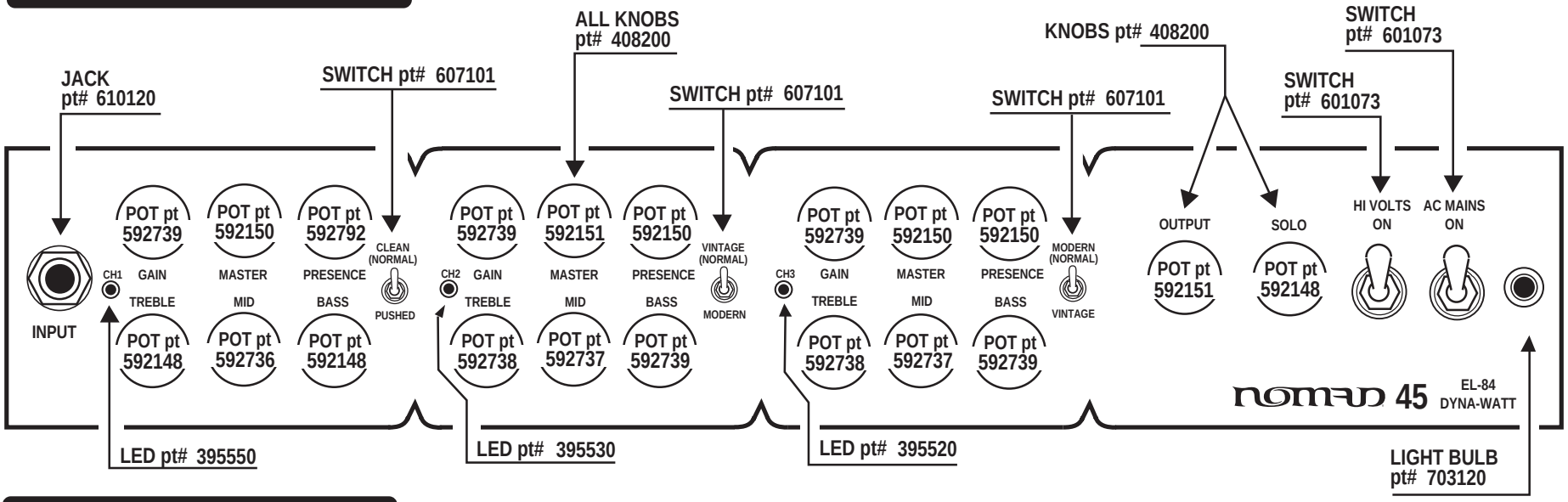
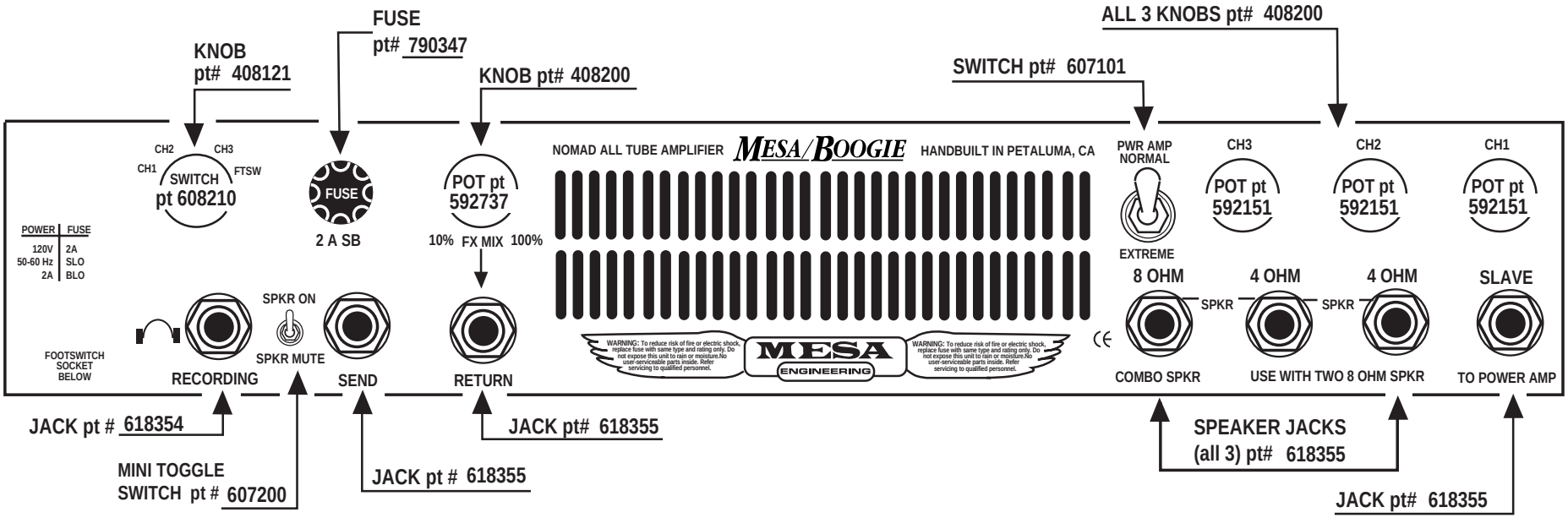
REAR PANEL Nomad 45